Added Index Sheet -01

Add Table - Joint Type, Depth Saw Cut, Depth Sealant

Add Detail Longitudinal Joint Transverse Section Thru PCCP (prev. sheet -02) and Tie Bar sizes table

Add Detail Sawed Joint with Hot Pour Sealant

DOWEL BAR SIZES	
Pavement Thickness, D	Dowel Bar Diameter
Less than 9"	1"
9" through 12"	$1\frac{1}{4}$"
Greater than 12"	$1\frac{1}{2}$"

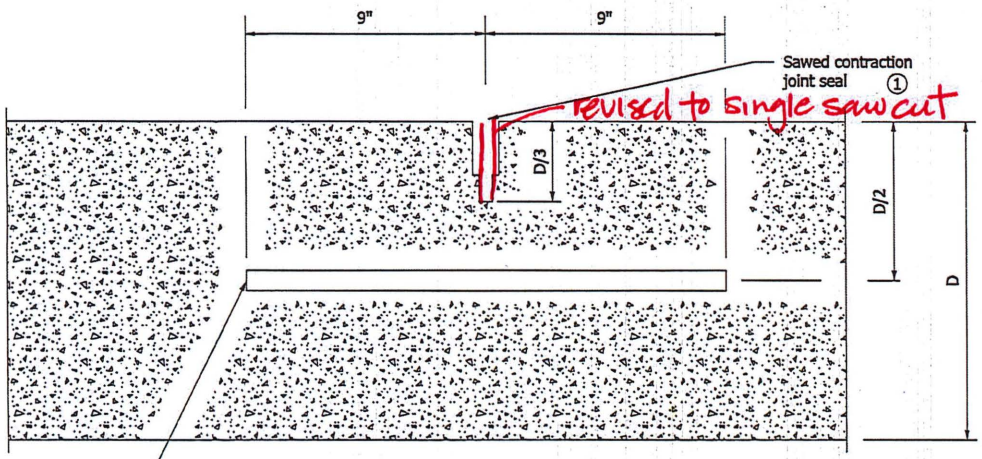

Epoxy coated dowel bars at 1'-0" c/c, at 6" min. from edge of PCCP (See table for dowel bar diameter)

Type D-1 Contraction Joint

LONGITUDINAL SECTION THROUGH PCCP

Notes

1. Multiple passes of sealant may be required
2. Backer rod shall not be installed

NOTES:

~~① For Type D-1 contraction joint sealant options, see Standard Drawing E 503-CCPJ-06.~~

INDIANA DEPARTMENT OF TRANSPORTATION

~~TYPE D-1~~

~~CONTRACTION JOINT~~

SAWED JOINTS AND HOTPOUR SEALANT

SEPTEMBER ~~2007~~ 2020

STANDARD DRAWING NO. E 503-CCPJ-~~01~~ -02

RICHARD L. VanCLEAVE REGISTERED No. 9750 STATE OF INDIANA PROFESSIONAL ENGINEER

DESIGN STANDARDS ENGINEER

/s/ Richard L. VanCleave 9/4/07
DESIGN STANDARDS ENGINEER DATE

/s/ Mark A. Miller 9/4/07
CHIEF HIGHWAY ENGINEER DATE

Detail and table moved to Sheet -02

TIE-BAR SIZES FOR LONGITUDINAL JOINT	
Pavement Thickness, D	Tie-Bar Size
Less than or equal to 9"	#5
Greater than 9"	#6

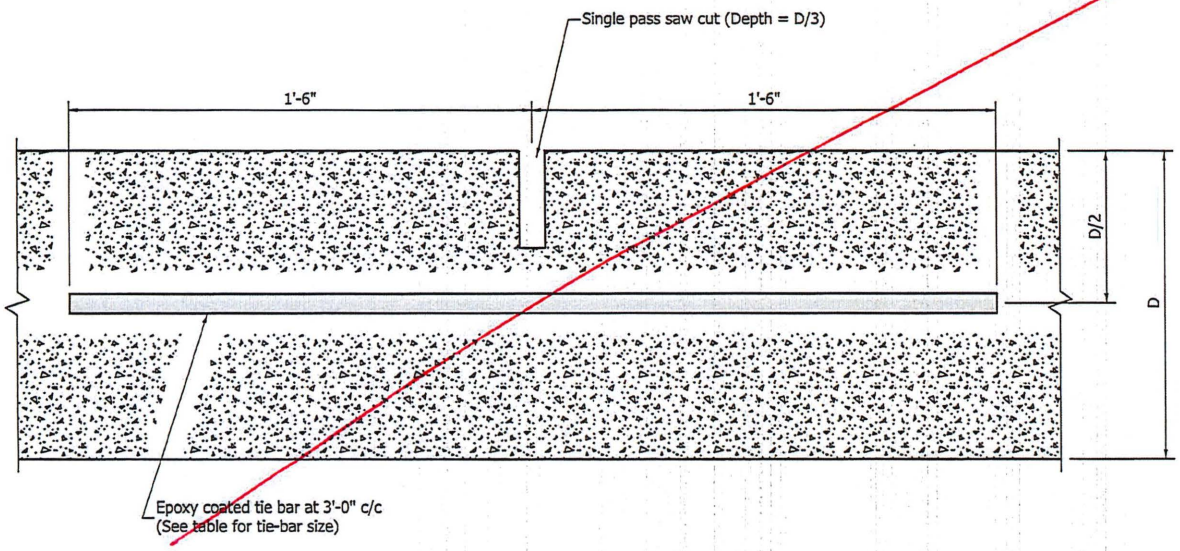

TRANSVERSE SECTION THROUGH PCCP

INDIANA DEPARTMENT OF TRANSPORTATION

LONGITUDINAL JOINT

SEPTEMBER ~~2012~~ 2020

STANDARD DRAWING NO. E 503-CCPJ-02

RICHARD L. VanCLEAVE REGISTERED No. 9750 STATE OF INDIANA PROFESSIONAL ENGINEER

/s/ Richard L. VanCleave 09/04/12
SUPERVISOR, ROADWAY STANDARDS DATE

/s/ Mark A. Miller 09/04/12
CHIEF ENGINEER DATE

Delete sheet

Hot Poured Joint Sealant revised # and moved to sheet -02

Silicone Joint Sealant Deleted

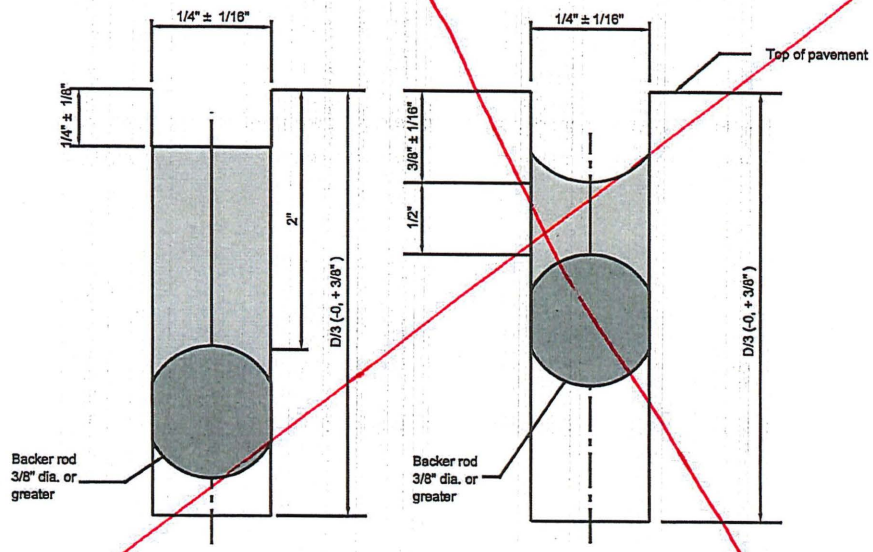

HOT POURED JOINT SEALANT

SILICONE JOINT SEALANT

SAWED LONGITUDINAL JOINT SEALANT OPTIONS

INDIANA DEPARTMENT OF TRANSPORTATION	
LONGITUDINAL JOINT	
MARCH 2004	
STANDARD DRAWING NO. E 503-CCPJ-03	
RICHARD L. VANCLEAVE REGISTERED No. 9750 STATE OF INDIANA PROFESSIONAL ENGINEER DESIGN STANDARDS ENGINEER	/s/ Richard L. VanCleave 3-0-04 DESIGN STANDARDS ENGINEER DATE /s/ Richard K. Smutzer 3-0-04 CHIEF HIGHWAY ENGINEER DATE

Delete sheet

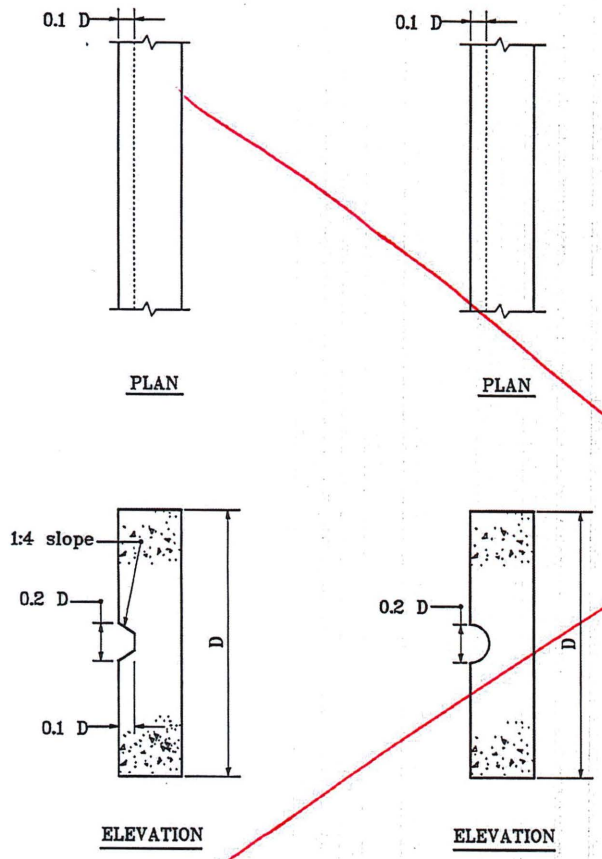

NOTES

1. See Standard Drawings E 503-CCPJ-01, -02, and -03 for sawed construction joint sealant options.

INDIANA DEPARTMENT OF TRANSPORTATION

LONGITUDINAL
KEYWAY JOINT

SEPTEMBER 1999

STANDARD DRAWING NO. E 503-CCPJ-04

ANTHONY L. UREMOVICH REGISTERED No. 18095 STATE OF INDIANA PROFESSIONAL ENGINEER

DESIGN STANDARDS ENGINEER

/s/ Anthony L. Uremovich 9-01-99
DESIGN STANDARDS ENGINEER DATE

/s/ Donald W. Lucas 9-01-99
CHIEF HIGHWAY ENGINEER DATE

format and renumber sheet

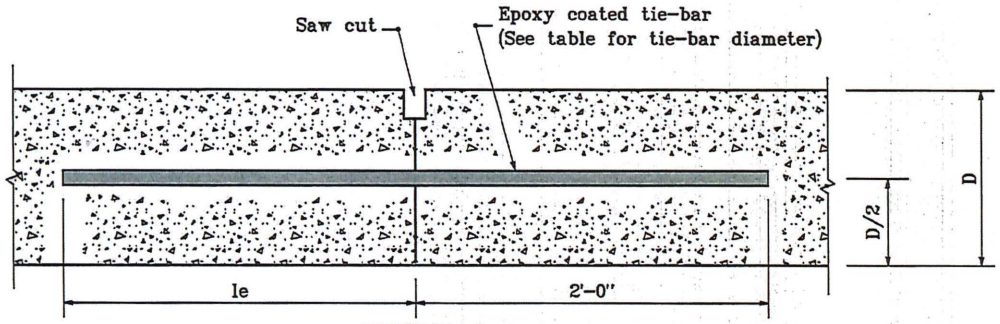

SECTION A-A

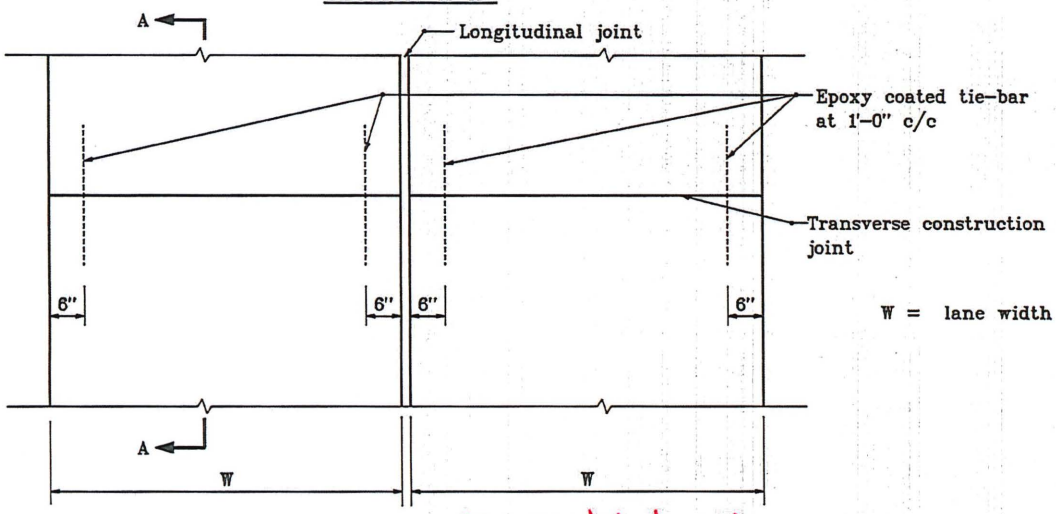

W = lane width

PLAN (view rotated 90°)

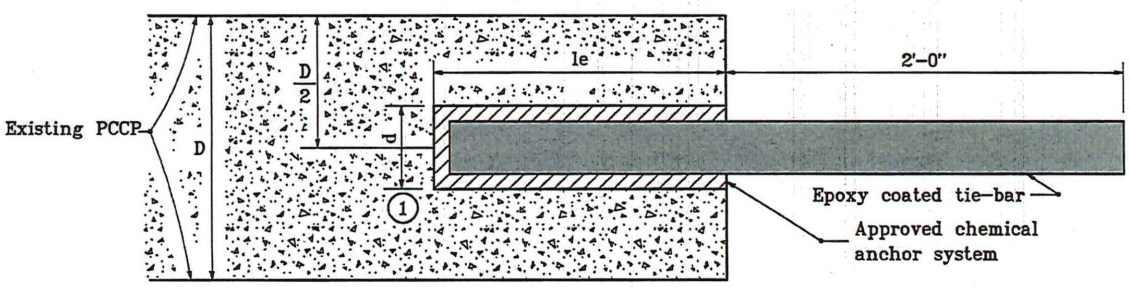

RETROFIT CONSTRUCTION TIE-BAR EMBEDMENT DETAIL

NOTES

1. Diameter of drilled hole d shall be in accordance with the chemical anchor system manufacturer's instructions.

TIE-BAR SIZES FOR TRANSVERSE CONSTRUCTION JOINT

Pavement Thickness, D	Tie Bar Size	Min. le
Less than 9"	#5	1'-0"
9" through 12"	#8	1'-8"
Greater than 12"	#10	2'-0"

INDIANA DEPARTMENT OF TRANSPORTATION

TRANSVERSE CONSTRUCTION JOINT

SEPTEMBER ~~1999~~ 2020

STANDARD DRAWING NO. E 503-CCPJ-~~05~~ -03

ANTHONY L. UREMOVICH REGISTERED No. 18095 STATE OF INDIANA PROFESSIONAL ENGINEER

DESIGN STANDARDS ENGINEER

/s/ Anthony L. Uremovich 9-01-99
DESIGN STANDARDS ENGINEER DATE

/s/ Donald W. Lucas 9-01-99
CHIEF HIGHWAY ENGINEER DATE

sheet deleted

NOTES

1. Transverse joints shall be constructed perpendicular to the centerline with a maximum spacing of 18'-0" unless otherwise specified.
2. The configuration of the preformed elastomeric joint seal shall be a 9/16" to 5/8" wide seal with at least a five cell internal design. The seal height shall be 9/16" to 13/16" in uncompressed stage.
3. For transverse construction joints, the initial saw cut may be eliminated.

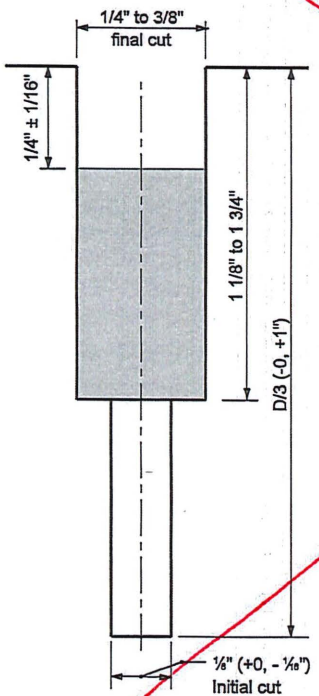

PREFORMED ELASTOMERIC SEAL

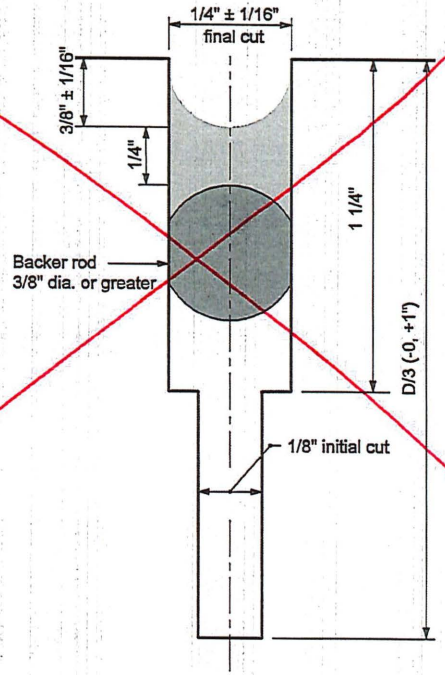

SILICONE JOINT SEALANT

TYPE D-1 SAWED CONTRACTION JOINT SEALANT OPTIONS

INDIANA DEPARTMENT OF TRANSPORTATION

TRANSVERSE JOINT SEALS

MARCH 2005

STANDARD DRAWING NO. E 503-CCPJ-06

RICHARD L. VanCLEVE REGISTERED No. 9750 STATE OF INDIANA PROFESSIONAL ENGINEER

DESIGN STANDARDS ENGINEER

/s/ Richard L VanCleave — DESIGN STANDARDS ENGINEER — 3-01-05 DATE

/s/ Richard K. Smutzer — CHIEF HIGHWAY ENGINEER — 3-01-05 DATE

reformatted and renumbered sheet-04

TIE-BAR SIZES FOR LONGITUDINAL CONSTRUCTION JOINT		
Pavement Thickness, D	Tie-Bar Size	Spacing
Less than 9"	#5	3'-0" c/c
9" through 12"	#6	3'-0" c/c
Greater than 12"	#6	2'-0" c/c
	or #7	3'-0" c/c

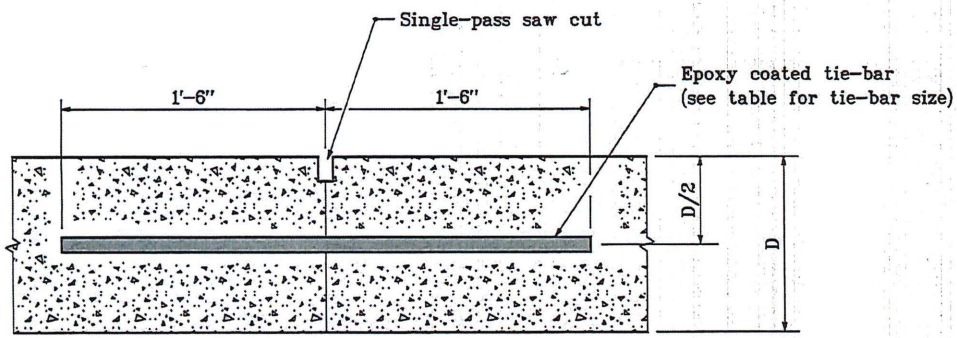

SECTION A-A

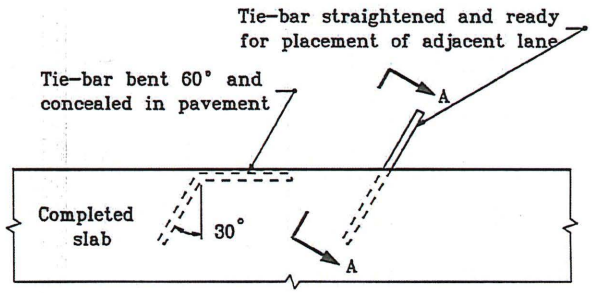

PLAN VIEW

METHOD OF PLACING TIE-BAR
FOR LONGITUDINAL CONSTRUCTION JOINT

INDIANA DEPARTMENT OF TRANSPORTATION

LONGITUDINAL CONSTRUCTION JOINT

~~SEPTEMBER 1999~~ 2020 -04

STANDARD DRAWING NO. E 503-CCPJ-~~07~~

ANTHONY L. UREMOVICH REGISTERED No. 18095 STATE OF INDIANA PROFESSIONAL ENGINEER

DESIGN STANDARDS ENGINEER

/s/ Anthony L. Uremovich 9-01-99
DESIGN STANDARDS ENGINEER DATE

/s/ Donald W. Lucas 9-01-99
CHIEF HIGHWAY ENGINEER DATE

delete sheet
details formatted, moved to sheet -04

NOTES:

(1) Diameter of drilled hole (d) shall be in accordance with the chemical anchor system manufacturer's instructions.

PAVEMENT THICKNESS, D	LONGITUDINAL CONSTRUCTION JOINT Retrofit Tie-bars at 3'-0" c/c	
	TIE-BAR SIZE	MIN. LENGTH OF EMBEDMENT, le
Less than or equal to 9"	#5	1'-0"
Greater than 9"	#6	1'-0"

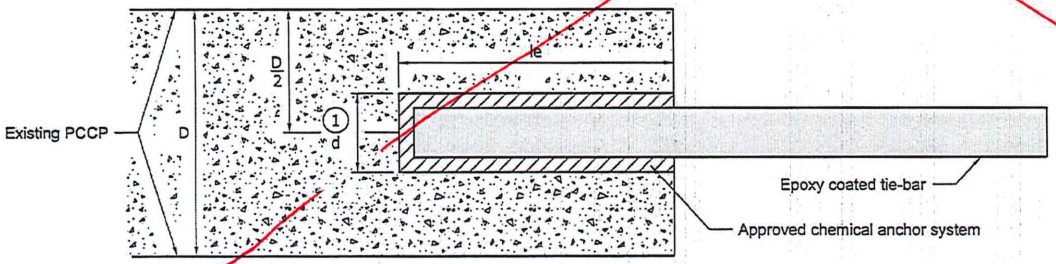

RETROFIT CONSTRUCTION TIE-BAR EMBEDMENT DETAIL

INDIANA DEPARTMENT OF TRANSPORTATION

LONGITUDINAL CONSTRUCTION JOINT

SEPTEMBER ~~2011~~ 2020

STANDARD DRAWING NO. E 503-CCPJ-08

RICHARD L. VanCLEAVE REGISTERED No. 9750 STATE OF INDIANA PROFESSIONAL ENGINEER

DESIGN STANDARDS ENGINEER

/s/ Richard L. VanCleave 09/01/11
DESIGN STANDARDS ENGINEER DATE

/s/ Mark A. Miller 09/01/11
CHIEF HIGHWAY ENGINEER DATE